arXiv:1903.00904v1 [cs.LG] 3 Mar 2019

Self-adversarial Variational Autoencoder with Gaussian Anomaly Prior Distribution for Anomaly Detection

Xuhong Wang[1*], **Ying Du**[1], **Shijie Lin**[2], **Ping Cui**[1] and **Yupu Yang**[1]

[1]Shanghai Jiao Tong University, China
[2]Wuhan University, China

{wang_xuhong, duying}@sjtu.edu.cn, linshijie@whu.edu.cn, {cuiping, ypyang}@sjtu.edu.cn

Abstract

Recently, deep generative models have become increasingly popular in unsupervised anomaly detection. However, deep generative models aim at recovering the data distribution rather than detecting anomalies. Besides, deep generative models have the risk of overfitting training samples, which has disastrous effects on anomaly detection performance. To solve the above two problems, we propose a Self-adversarial Variational Autoencoder with a Gaussian anomaly prior assumption. We assume that both the anomalous and the normal prior distribution are Gaussian and have overlaps in the latent space. Therefore, a Gaussian transformer net T is trained to synthesize anomalous but near-normal latent variables. Keeping the original training objective of Variational Autoencoder, besides, the generator G tries to distinguish between the normal latent variables and the anomalous ones synthesized by T, and the encoder E is trained to discriminate whether the output of G is real. These new objectives we added not only give both G and E the ability to discriminate but also introduce additional regularization to prevent overfitting. Compared with the SOTA baselines, the proposed model achieves significant improvements in extensive experiments. Datasets and our model are available at a Github repository.[1]

1 Introduction

Anomaly detection (or outlier detection) can be regarded as the identification task of rare data items differing from the majority of the data. Anomaly detection is applicable in a variety of domains, such as intrusion detection, fraud detection, fault detection, system health monitoring, server monitoring and so on. Owing to the lack of labeled anomaly samples, unsupervised models are more popular than supervised models in anomaly detection field. Unsupervised anomaly detection aims at identifying the outliers by training with normal data only (a few abnormal data in training set are allowed). [Pimentel *et al.*, 2014] has reviewed conventional machine learning anomaly detection algorithms comprehensively.

Recently, deep generative models have become increasingly popular in unsupervised anomaly detection [Chalapathy and Chawla, 2019]. Variational Autoencoder (VAE) [Kingma and Welling, 2013] is one of the promising deep generative models. The first work using VAE for anomaly detection [An and Cho, 2015] declared that VAEs generalize more easily than autoencoders (AEs) because VAEs work on probabilities. [Sölch *et al.*, 2016; Suh *et al.*, 2016] used different kinds of RNN-VAE architecture to recognize the outliers of time series data. Both [Osada *et al.*, 2017] and [Xu *et al.*, 2018] implemented VAE for intrusion detection and server monitoring. Furthermore, Generative Adversarial Networks (GANs) [Goodfellow *et al.*, 2014] and Adversarial Autoencoders [Makhzani *et al.*, 2016] have also been introduced into image [Schlegl *et al.*, 2017; Akcay *et al.*, 2018; Dimokranitou, 2017; Pidhorskyi *et al.*, 2018] and video [Ravanbakhsh *et al.*, 2017] anomaly detection.

However, deep generative models only aim at recovering the data distribution of the training set, which has a limited and indirect contribution to detecting anomalies. Those earlier studies paid no attention to customize their models for unsupervised anomaly detection tasks. Consequently, there is an enormous problem that those models just learn from available normal samples only, without attempting to discriminate the anomalous. Due to the lack of the discrimination, it is hard for those models to learn useful deep representation for anomaly detection tasks.

In addition, plain VAEs use the regularization of Kullback-Leibler divergence (KLD) to limit the power of encoder, but sometimes the learned representation is completely useless [Zhao *et al.*, 2017]. The encoder hopes that all data points x are encoded as the prior distribution ($\mathcal{N}(0, I)$), so the latent representation z loses much information about x. Meanwhile, to achieve the training objective (low reconstruction error), plain VAEs often try to build a powerful but confused generator since there is no regularization implemented in the generator. This kind of generator often ignores the meaningful latent variables and maps all kinds of the Gaussian latent variables to the original data space without discriminating. In this case, models tend to overfit the distribution of existing normal data and cause a bad result (e.g., high false positive

*Contact Author

[1]To obey blind reviewing policy, the Github address will be made public after accepted.

rate), especially when the data are sparse.

There are only a handful of researches attempting to solve the above two problems. As shown in Figure 1(a), [Zheng *et al.*, 2018; Kawachi *et al.*, 2018] proposed an assumption that the anomaly prior distribution is the complementary set of normal prior in latent space. However, we do not think that assumption is completely correct. If the anomalous and the normal data have complementary distribution, which means that they are separated. Then we can use a simple method (such as KNN) to detect anomalies in the latent space and achieve satisfactory results, but this is not the truth. Both the normal data and the outliers are generated by some kind of natural pattern. Natural data ought to conform to a common data distribution, and it's hard to imagine a natural pattern that produces such a strange distribution like Figure 1(a).

In order to enhance deep generative models to distinguish between the normal and anomalous samples and to prevent them from overfitting the given normal data, we propose a Self-adversarial Variational Autoencoder (adVAE) with a Gaussian anomaly prior assumption and an adversarial regularization mechanism. As described in Figure 1(b), our assumption is that both the anomalous and the normal prior distribution are Gaussian and have overlaps in the latent space. Therefore we train a Gaussian transformer net T to synthesize anomalous but near-normal latent variables.

Keeping the original functions of the generator and encoder of VAE, we additionally give them the ability to discriminate. The generator tries to distinguish between the normal latent variables and the anomalous ones synthesized by T, and the encoder is trained to discriminate whether the output of G is real. These new objectives we added not only give G and E the ability to discern but also introduce additional regularization to prevent model overfitting. In short, our training process can be divided into two steps: (1) T tries to mislead the generator G, meanwhile G works as a discriminator. (2) G generate realistic-like samples and the encoder E is a discriminator of G. To make the training phase more robust, inspired by [Huang *et al.*, 2018], we train alternatively between the above two steps in a mini-batch iteration.

Our main contributions are summarized as follows:

1. We propose a Gaussian anomaly prior assumption and train a Gaussian transformer net T in an adversarial manner to generate anomaly latent variables.
2. We encourage both the encoder and the generator to discriminate outliers with keeping their original training targets. Previous works just use generative models directly to detect outliers without any customization.
3. The proposed loss objective of discriminating outliers provides the plain VAE with a novel regularization, which helps VAE to avoid overfitting normal data.
4. The proposed novel self-adversarial mechanism is a prospective way of customizing generative models to fit anomaly detection tasks.
5. Most of deep generative model based anomaly detection methods have been implemented in image datasets, we use tabular datasets from diverse domains to test methods' performance broadly.

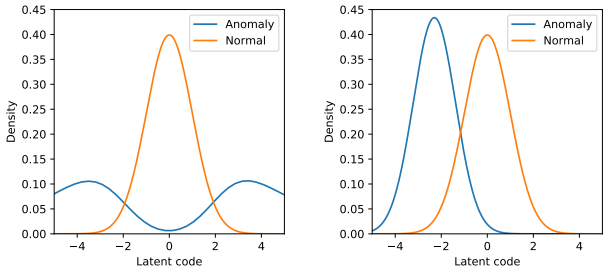

(a) Others' assumption (b) Our anomaly assumption

Figure 1: Our assumption is that the normal data prior distribution is a Gaussian distribution closes to $\mathcal{N}(0, I)$, the anomalous prior is another Gaussian distribution whose mean and variance are unknown and different from the normal prior, with overlaps in the latent space.

2 Background

2.1 Autoencoder-based Anomaly Detection

An autoencoder, which is composed of an encoder and a decoder, is a neural network used to learn reconstructions as close as possible to its original inputs. Given a datapoint x, the loss function can be viewed as minimizing the reconstruction error between the training data and the outputs of AE, θ and ϕ denotes the hidden parameters of the encoder E and the decoder G:

$$\mathcal{L}_{AE}(x, \phi, \theta) = \|x - G_\theta\left(E_\phi(x)\right)\|^2 \tag{1}$$

After training, the reconstruction error of each test data will be regarded as the anomaly score. The data with high anomaly score will be defined as anomalies, because only the normal data are used to train the AE. The AE will reconstruct normal data very well, while failing to do so with anomaly data which the AE has not encountered.

2.2 VAE-based Anomaly Detection

The net architecture of VAEs is similar to AEs, while the difference is that the encoder of VAEs force the representation code z to obey some kind of prior probability distribution $p(z)$ (e.g., $\mathcal{N}(0, I)$). Then the decoder generate new realistic data with code z sampled from $p(z)$. In VAEs, both the encoder and decoder conditional distributions are denoted as $q_\phi(z|x)$ and $p_\theta(z|x)$. The data distribution $p_\theta(x)$ is intractable by analytic methods, so variational inference methods are introduced to solve the maximum likelihood $\log p_\theta(x)$:

$$\begin{aligned}\mathcal{L}(x) &= \log p_\theta(x) - KL\left[q_\phi(z|x)\|p_\theta(z|x)\right] \\ &= E_{q_\phi(z|x)}\left[\log p_\theta(x) + \log p_\theta(z|x) - \log q_\phi(z|x)\right] \\ &= -KL\left(q_\phi(z|x)\|p_\theta(z)\right) + E_{q_\phi(z|x)}\left[\log p_\theta(x|z)\right]\end{aligned} \tag{2}$$

KL is a similarity measure between two distributions. To estimation this maximum likelihood, VAE needs to maximum the evidence variational lower bound (ELBO) $\mathcal{L}(x)$. To optimize the KLD between $q_\phi(z|x)$ and $p_\theta(z)$, the encoder estimate the parameter vectors of Gaussian distribution $q_\phi(z|x)$: mean μ and standard deviation σ. There is an analytical expression for their KL divergence, because both $q_\phi(z|x)$ and

$p_\theta(z)$ are Gaussian. For optimizing the second term of equation (2), VAEs minimize the reconstruction errors between the inputs and the outputs. Given a datapoint x, the objective function can be rewritten as:

$$\begin{aligned}\mathcal{L}_{VAE} =& \mathcal{L}_{MSE}(x, G_\theta(z)) + \mathcal{L}_{KLD}\left(E_\phi\left(x\right)\right) \\ =& \mathcal{L}_{MSE}(x, x_r) + \mathcal{L}_{KLD}(\mu, \sigma)\end{aligned} \tag{3}$$

$$\mathcal{L}_{MSE}(x, x_r) = \left\|x - x_r\right\|^2 \tag{4}$$

$$\begin{aligned}\mathcal{L}_{KLD}(\mu, \sigma) =& KL\left(\mathcal{N}\left(\mu, \sigma^2\right) \| \mathcal{N}\left(0, I\right)\right) \\ =& \frac{1}{2}\left(1 + \log(\sigma^2) - \mu^2 - \sigma^2\right)\end{aligned} \tag{5}$$

The first term $\mathcal{L}_{MSE}(x, x_r)$ is the mean squared error (MSE) between the inputs and their reconstructions. The second term $\mathcal{L}_{KLD}(\mu, \sigma)$ regularizes the encoder by encouraging the approximate posterior $q_\phi(z|x)$ to match the prior $p(z)$.

AEs define the reconstruction error as the anomaly score in the test phase, while VAEs use reconstruction probability to detect outliers. To estimate the probabilistic anomaly score, VAEs sample z according to the prior $p_\theta(z)$ for L times and calculate the average reconstruction error as reconstruction probability. That's why VAEs work more robustly than traditional AEs in anomaly detection domain.

2.3 Adversarial Anomaly Detection

Since GAN was first put forward in 2014, GANs have become increasingly popular and have been applied for diverse tasks. GAN model comprises two components, which contesting with its counterpart in a cat-mouse game, called Generator and Discriminator. The generator creates samples that resemble the real data, while the discriminator is trying to recognize the fake samples from the real ones. Trained with the normal data, the discriminator can be used to detect outliers.

3 Self-adversarial Variational Autoencoder

In this section, a Self-adversarial Variational Autoencoder (adVAE) for anomaly detection is proposed. In order to customize plain VAE to fit anomaly detection task, we propose the assumption of Gaussian anomaly prior and introduce the self-adversarial mechanism into traditional VAE. The proposed method consists of three modules: an encoder net E, a generative net G and a Gaussian transformer net T.

There are two competitive relationships in the training phase of our method: (1) To generate potential anomaly prior distribution and enhance the generator's ability to discriminate between normal and anomaly prior, we train the Gaussian transformer T and the generator G with adversarial objective simultaneously. (2) To produce more realistic samples in a competitive manner and make the encoder learn to discern, we train the generator and the encoder analogous to the generator and discriminator in GANs.

According to equation (3), there are two components in the objective function of VAEs: $\mathcal{L}_{MSE}$ and $\mathcal{L}_{KLD}$. The cost function of adVAE is the modified combination objective of these two terms. In the following, we describe the training phase in subsection 3.1 to 3.3 and subsection 3.4 is for testing phase.

3.1 Step 1: the Competition between T and G

The generator of plain VAE is often so powerful that it maps all the Gaussian latent code to the high-dimensional data space even if the latent code is encoded from anomaly samples. Through the competition between T and G, we introduce an effective regularization into the generator.

Our anomaly prior assumption suggests that it is difficult for the generator of plain VAE to distinguish the normal and the anomalous latent code since they have overlaps in the latent space. To solve this problem, we synthesize anomalous latent variables and make the generator discriminate the anomalous from the normal latent code. As shown in Figure 2 (a), we freeze the weights of E and update G and T in this training step. The Gaussian transformer T receives the normal Gaussian latent variables z encoded from the normal training samples as the inputs and transform z to the anomalous Gaussian latent variables z_T with different mean μ_T and standard deviation σ_T. T aims at reducing the KLD between $\{z; \mu, \sigma\}$ and $\{z_T; \mu_T, \sigma_T\}$, and G tries to generate as different as possible samples from such two similar latent code.

Given a datapoint x, the objective function in this competition process can be defined as:

$$\begin{aligned}\mathcal{L}_T &= KL\left(\mathcal{N}\left(\mu, \sigma^2\right) \| \mathcal{N}(\mu_T, \sigma_T^2)\right) \\ &= \log\frac{\sigma_T}{\sigma} + \frac{\sigma^2 + (\mu - \mu_T)^2}{2\sigma_T^2} - \frac{1}{2}\end{aligned} \tag{6}$$

$$\mathcal{L}_G = \mathcal{L}_{Gz} + \mathcal{L}_{Gz_T} \tag{7}$$

$$\begin{aligned}\mathcal{L}_{Gz} =& \mathcal{L}_{MSE}\left(x, G\left(z\right)\right) + \mathcal{L}_{KLD}\left(E\left(G\left(z\right)\right)\right) \\ =& \mathcal{L}_{MSE}\left(x, x_r\right) + \mathcal{L}_{KLD}(\mu_r, \sigma_r)\end{aligned} \tag{8}$$

$$\begin{aligned}\mathcal{L}_{Gz_T} =& \left[m_x - \mathcal{L}_{MSE}(G\left(z\right), G\left(z_T\right))\right]^+ \\ &+ \left[m_z - \mathcal{L}_{KLD}\left(E\left(G\left(z_T\right)\right)\right)\right]^+ \\ =& \left[m_x - \mathcal{L}_{MSE}(x_r, x_{Tr})\right]^+ \\ &+ \left[m_z - \mathcal{L}_{KLD}(\mu_{Tr}, \sigma_{Tr})\right]^+\end{aligned} \tag{9}$$

$[\cdot]^+ = \max(0, \cdot)$, m_x is a positive margin of MSE target, and m_z is a positive margin of KLD target. The aim is to hold the corresponding target term below the margin value for most of the time. $\mathcal{L}_{Gz}$ is the objective for the data flow of z, and $\mathcal{L}_{Gz_T}$ focus on the pipeline of z_T.

$\mathcal{L}_T$ and $\mathcal{L}_G$ are two adversarial objectives and the total objective function in this training step is the sum of the two. Objective $\mathcal{L}_T$ encourages T to mislead G by synthesizing z_T similar to z so that G cannot distinguish them. Objective $\mathcal{L}_G$ forces the generator to distinguish between z and z_T. T hopes that z_T is close to z, while G hopes that z_T is farther away from z. After iterative learning, T and G will reach a balance. T will generate anomalous latent variables that close to the normal latent variables, and the generator will distinguish them by different reconstruction errors. Although the anomalous latent variables synthesized by T are not necessarily real, it is helpful for the models as long as they try to identify the outliers.

Since the updating of E will affect the balance of T and G, we freeze the weights of E when training T and G. If we do not do this, it will be an objective of three networks' equilibrium which is extremely hard to be optimized.

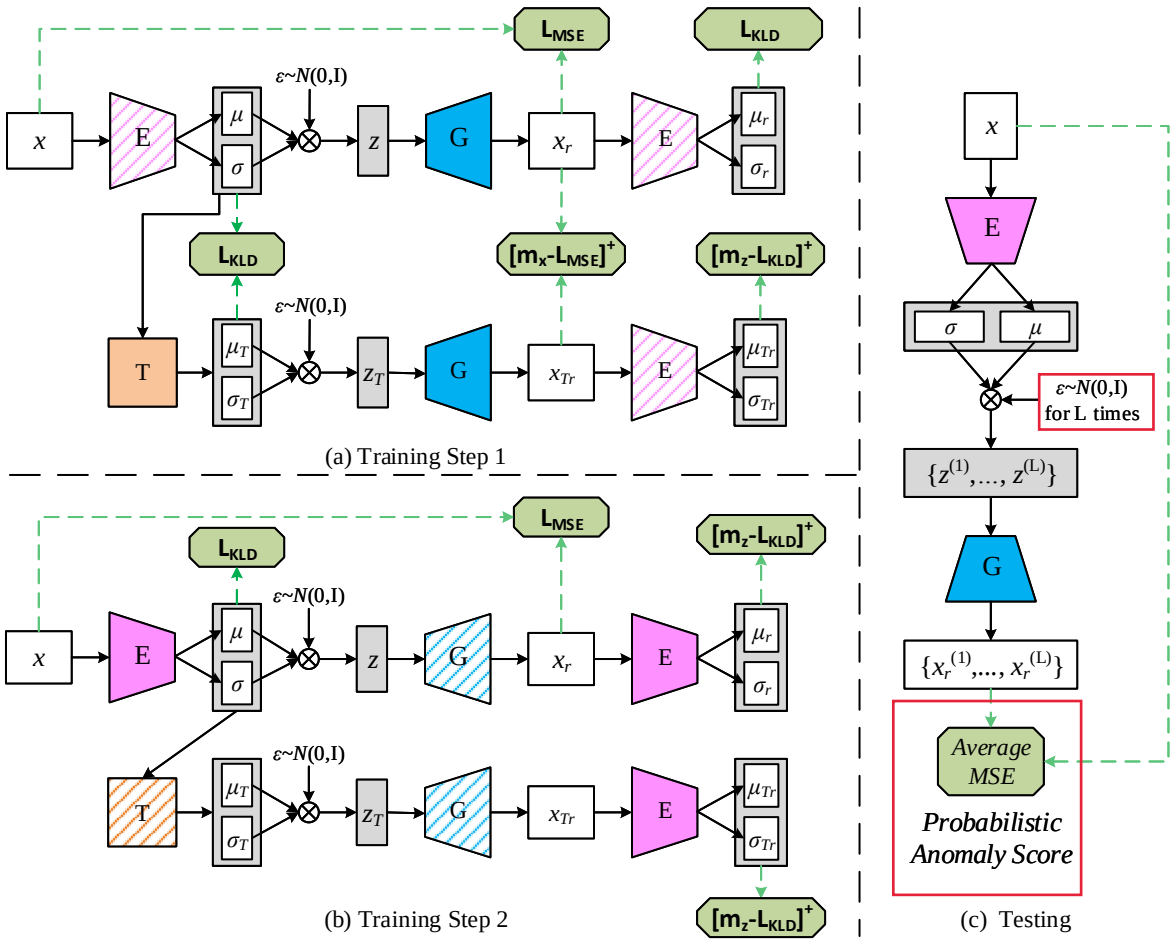

Figure 2: The architecture and training flow of adVAE. Hatch lines mean we freeze the weights of corresponding networks. (a) Updating the decoder G and the Gaussian transformer T. (b) Updating the encoder E. (c) Detecting outliers.

3.2 Step 2: Training E like a Discriminator

In the first training step demonstrated in the previous subsection, we freeze the weights of E. Instead, as shown in Figure 2 (b), we freeze the weights of T and G and update the encoder E now. The encoder not only attempts to project the data samples x to Gaussian latent variables z like original VAE but also works like a discriminator in GANs. The objective of the encoder is written as below:

$$\begin{aligned}\mathcal{L}_E =& \mathcal{L}_{KLD}\left(E\left(x\right)\right) + \mathcal{L}_{MSE}\left(x, G\left(z\right)\right) \\ &+ \left[m_z - \mathcal{L}_{KLD}\left(E\left(G\left(z\right)\right)\right)\right]^+ \\ &+ \left[m_z - \mathcal{L}_{KLD}\left(E\left(G\left(z_T\right)\right)\right)\right]^+ \\ =& \mathcal{L}_{KLD}(\mu, \sigma) + \mathcal{L}_{MSE}(x, x_r) \\ &+ \left[m_z - \mathcal{L}_{KLD}(\mu_r, \sigma_r)\right]^+ \\ &+ \left[m_z - \mathcal{L}_{KLD}(\mu_{Tr}, \sigma_{Tr})\right]^+\end{aligned} \tag{10}$$

The first two terms of Equation 10 are the objective function of plain VAE. The encoder is trained to encode the inputs as close to the prior distribution when the inputs are from training dataset. The last two terms are the discriminating loss we proposed. The encoder is prevented from mapping the reconstructions of training data to the latent code of prior distribution.

Objective $\mathcal{L}_E$ provides the encoder with the ability of discriminating whether the input is normal, because the encoder is encouraged to discover differences between the training samples (normal) and their reconstructions (anomalous). It is worth mentioning that the encoder with discriminating ability also helps the generator distinguish between the normal and the anomalous latent code.

3.3 Alternating between the Above Two Steps

As described in Algorithm 1, we train alternatively between the above two steps in a mini-batch iteration. These two steps are repeated until convergence. $detach(\cdot)$ indicates that the back propagation of the gradients is stopped at this point.

In the first training step, the Gaussian transformer converts normal latent variables into anomalous latent variables. At the same time, the generator is trained to generate realistic-like samples when the latent variables are normal, whereas to synthesize a low-quality reconstruction when not normal. It offers the generator the ability to distinguish between the nor-

Algorithm 1 Training adVAE model

Input: Normal training dataset X.
Parameter: ϕ_E, θ_G, δ_T $\leftarrow$ Initialize network parameters.
Output: An encoder net E and a generator net G.

while not converged **do**
  $x \leftarrow$Random mini-batch from training dataset.
  $\{\mu, \sigma\} \leftarrow E_\phi(x)$.
  $\{\mu_T, \sigma_T\} \leftarrow T_\delta(\mu, \sigma)$.
  $z \leftarrow$Samples from $\mathcal{N}\left(\mu, \sigma^2\right)$,
  $z_T \leftarrow$Samples from $\mathcal{N}\left(\mu_T, \sigma_T^2\right)$.
  $x_r \leftarrow G_\theta(z)$, $x_{Tr} \leftarrow G_\theta(z_T)$.
  $\{\mu_r, \sigma_r\} \leftarrow E_\phi(x_r)$, $\{\mu_{Tr}, \sigma_{Tr}\} \leftarrow E_\phi(x_{Tr})$.
  Calculating $\mathcal{L}_G$ and $\mathcal{L}_T$.
  $\{\theta_G, \delta_T\} \leftarrow \{\theta_G, \delta_T\} - \eta \nabla_{\theta,\delta}(\mathcal{L}_G + \mathcal{L}_T)$.
  $x_r \leftarrow G_\theta(z)$, $x_{Tr} \leftarrow G_\theta(z_T)$.
  $\{\mu_r, \sigma_r\} \leftarrow E_\phi\left(detach(x_r)\right)$,
  $\{\mu_{Tr}, \sigma_{Tr}\} \leftarrow E_\phi\left(detach(x_{Tr})\right)$.
  Calculating $\mathcal{L}_E$.
  $\phi_E \leftarrow \phi_E - \eta \nabla_\phi(\mathcal{L}_E)$.
end while

mal and the anomalous latent variables. In the second training step, the encoder not only maps the samples to the prior latent distribution but also attempts to distinguish between the real data x and generated samples x_r.

What is important is that we introduce the competition of E and G into our adVAE model by training alternatively between these two steps. Analogously to GANs, the generator is trained to fool the encoder in training step 1 and the encoder is encouraged to discriminate the samples generated by the generator in step 2. In addition to benefitting from adversarial alternative learning like GANs, the encoder and generator models will also learn jointly for the given training data to maintain the advantages of VAEs.

3.4 Detecting Outliers

As demonstrated in Figure 2 (c), the testing phase is identical to traditional VAE for anomaly detection. Given a test data point x as the input, the encoder estimates the parameters of latent Gaussian variables μ and σ as the output. Then the reparameterization trick is used to sample z for L times according to the latent distribution $\mathcal{N}\left(\mu, \sigma^2\right)$, i.e. $z^{(l)} = \mu + \sigma \odot \epsilon^{(l)}$ where $\epsilon \sim \mathcal{N}(0, I)$ and $l = 1, ..., L$. The generator receive $z^{(l)}$ as the input and output the reconstruction $x_r^{(l)}$. The reconstruction probability of a data point x is calculated by

$$\frac{1}{L} \sum_{l=1}^{L} \|x_r^{(l)} - x\|^2, \tag{11}$$

which is the Monte Carlo estimation [Geweke, 1989] of $E_{q_\phi(z|x)}\left[\log p_\theta(x|z)\right]$ in the ELBO function of VAE (equation 2). Data points with high reconstruction probability are classified as anomalies. The decision threshold can be determined by Kernel Density Estimation (KDE) of training data' reconstruction errors [Gonzalez *et al.*, 2015] or by human experience.

Datasets	Size	Dimensions	Outliers (percentage)
letter	1600	32	100 (6.2%)
cardio	1831	21	176 (9.6%)
opticaldigits	5216	64	150 (2.8%)
pen	6870	16	156 (2.3%)
annthyroid	6916	21	250 (3.6%)

Table 1: Summary of datasets used in experiments.

4 Experiments

4.1 Datasets

Although unsupervised anomaly detection does not utilize any label information in practice, they are needed for evaluation and comparison. Most of previous works used image datasets to test their anomaly detection models. To eliminate the impact of different convolutional structures and other image tricks on test performance, we chosen five publicly available and broadly used tabular anomaly detection datasets to evaluate our adVAE model. All dataset characteristics are summarized in Table 1. For each dataset, 80% of the normal data were used for the training phase, then the remaining 20% and all the outliers were used for the testing. More details about the datasets can be found in ODDS library[2] or our Github repository.

4.2 Evaluation Metric

As unsupervised anomaly detection is a challenging problem, decision threshold plays an important role in model evaluation. Hence, we would not recommend using metrics defined at single thresholds (e.g., precision, accuracy, recall and F1-score) to evaluate models. The anomaly detection community often uses ROC and Precision-Recall (PR) curve, which aggregate over all possible decision thresholds, to evaluate the predictive performance of each method.

When the class distribution is close to being uniform, ROC curves have many desirable properties. However, since anomaly detection tasks always have a large skew in the class distribution, PR curves give a more accurate picture of an algorithm's performance [Davis and Goadrich, 2006].

Rather than comparing curves, it is useful and clear to analyze the model performance quantitatively using a single number. AP (Average Precision) and AUC (Area Under the ROC Curve) are the common metrics to measure performance, with the former being preferred under class imbalance.

AP summarizes a PR curve by a sum of precisions at each threshold, multiplied by the increase in recall, which is closely approximate to the area under the PR curve.

$$AP = \sum_n P_n \Delta R_n \tag{12}$$

P_n is the precision at the nth threshold and ΔR_n is the increase in recall from $n-1^{th}$ to n^{th} threshold. We strongly recommend using AP as an evaluation metric for anomaly detection models rather than AUC.

[2]http://odds.cs.stonybrook.edu

Datasets	Average Precision (AP)					Area Under the ROC Curve (AUC)				
	OCSVM	AE	VAE	GAN	adVAE	OCSVM	AE	VAE	GAN	adVAE
letter	0.3391	*0.5149*	0.5112	0.4670	**0.5717**	0.6094	*0.7865*	0.7758	0.6787	**0.8089**
cardio	**0.9474**	0.8244	0.8373	0.6965	*0.9026*	**0.9750**	0.8474	0.8560	0.6180	*0.9263*
opticaldigit	0.1948	0.8598	*0.8753*	0.4173	**0.8851**	0.6780	0.9902	*0.9920*	0.7428	**0.9933**
pen	0.6516	0.6246	*0.8799*	0.3623	**0.9472**	0.9517	0.9587	*0.9818*	0.7791	**0.9957**
annthyroid	0.1966	0.2647	**0.3095**	0.1775	*0.2891*	0.5058	0.6576	**0.6866**	0.5574	*0.6681*
Average	0.4659	0.6177	*0.6826*	0.4241	**0.7189**	0.7440	0.8481	*0.8584*	0.6752	**0.8783**

Table 2: Comparisons between the baselines and adVAE. AP is a better metric than AUC in anomaly detection. Note that in each row the best result is typeset in **bold** and the second best in *italic* typeface. Our adVAE achieves four best and two second best results in six comparisons.

4.3 Model Configurations

In this subsection, we describe the network configurations of adVAE and other baselines. OCSVM [Schölkopf *et al.*, 2000] is implemented in scikit-learn with default algorithm setup and other methods is implemented in pytorch.

For all neural network based methods, we adopted feed-forward neural networks consisting of three hidden layers with Relu activation functions. The latent code dimension of each model was set as a third of the input dimension $\dim(x)$ with rounding operation. Size of all hidden layers equals to half of $\dim(x)$ (rounding). The Adam optimizer was used with a learning rate of 0.001. We trained each model for a total of 30000 iterations with a batch size of 32. PyTorch's default weight initialization was used in our experiments.

For VAE and adVAE, there are two types of target in their loss function: MSE target and KLD target. To hold the trade-off between these two targets, each KLD target term is multiplied by a scalar scaling hyperparameter λ. According to [Škvára *et al.*, 2018]'s experiments, we set λ equal to 0.01 for all datasets. Maximum margin m_z can be selected to be a little larger than the training KLD value of plain VAEs, and the m_z values we set for each test can be found on our github repository. m_x was set equal to 1 for each test. Note that the structure and hyperparameters used in this paper proved to be sufficient for our applications, while it can still be improved.

4.4 Discussion

Table 2 shows that adVAE is significantly better than existing state-of-the-art (SOTA) methods. By adding KLD regularization to the encoder, VAE plays better results than AE in five comparisons, which proves the importance of regularization in AE-based anomaly detection algorithms. We customize VAE by the proposed self-adversarial regularization, leading to the highest AP improvement rate of 6.73% compared to VAE. The better results of adVAE also proves the importance of discrimination ability of anomaly detection model. Figure 3, which supports our experiment results, illustrates that the encoder of adVAE does have a better discrimination ability. Similarly, there is every reason to believe that the generator also benefits from our self-adversarial mechanism.

Our experiments indicate that the conventional method OCSVM are not stable enough, and the AP improvement of adVAE reach an astonishing 69%. Since the mode collapse issue of GANs can not be characterized in training cost curve, people usually monitor the generated images during the training phase. However, for tabular datasets, it is hard for us to ensure whether the generated samples are diverse enough. A GAN with mode collapse will mislabel normal data as outliers and cause a high false positive rate. Therefore, training GAN in tabular datasets is so difficult that GAN does not perform well for outlier detection. In summary, the proposed novel self-adversarial mechanism is a prospective way of customizing generative models to fit anomaly detection tasks.

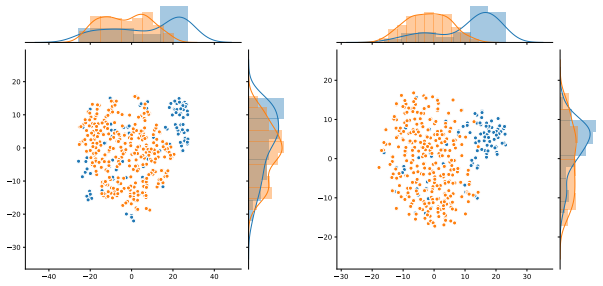

(a) VAE's latent space (b) adVAE's latent space

Figure 3: T-SNE visualization of the latent space in letter dataset. Orange points represent the latent variables encoded from normal data, while blue points are encoded from anomaly data. The KDE curves at top indicate that adVAE's latent space overlaps is smaller than VAE's, which means the encoder of adVAE does have a better ability to distinguish the normal data and the outliers.

5 Conclusion

In this paper, we have proposed a Self-adversarial Variational Autoencoder with a Gaussian anomaly prior assumption and an adversarial regularization mechanism. The proposed adVAE is encouraged to distinguish the normal latent code and the anomalous latent variables generated by the Gaussian transformer T, which can also be regarded as an outstanding regularization introduced into VAE-based outlier detection method. The results on several datasets demonstrate that the proposed adVAE outperforms other SOTA methods.

Acknowledgments

This research is in part supported by National Nature Science Foundation of China (No. 51777122).

References

[Akcay *et al.*, 2018] Samet Akcay, Amir Atapour-Abarghouei, and Toby P. Breckon. Ganomaly: semi-supervised anomaly detection via adversarial training. In *14th Asian Conference on Computer Vision (ACCV)*. Springer, 2018.

[An and Cho, 2015] Jinwon An and Sungzoon Cho. Variational autoencoder based anomaly detection using reconstruction probability. *Special Lecture on IE*, 2:1–18, 2015.

[Chalapathy and Chawla, 2019] Raghavendra Chalapathy and Sanjay Chawla. Deep learning for anomaly detection: A survey. *arXiv preprint arXiv:1901.03407*, 2019.

[Davis and Goadrich, 2006] Jesse Davis and Mark Goadrich. The relationship between precision-recall and roc curves. In *23rd international conference on Machine learning (ICML)*, pages 233–240. ACM, 2006.

[Dimokranitou, 2017] Asimenia Dimokranitou. *Adversarial autoencoders for anomalous event detection in images*. PhD thesis, 2017.

[Geweke, 1989] John Geweke. Bayesian inference in econometric models using monte carlo integration. *Econometrica: Journal of the Econometric Society*, pages 1317–1339, 1989.

[Gonzalez *et al.*, 2015] Ruben Gonzalez, Biao Huang, and Eric Lau. Process monitoring using kernel density estimation and bayesian networking with an industrial case study. *ISA transactions*, 58:330–347, 2015.

[Goodfellow *et al.*, 2014] Ian Goodfellow, Jean Pouget-Abadie, Mehdi Mirza, Bing Xu, David Warde-Farley, Sherjil Ozair, Aaron Courville, and Yoshua Bengio. Generative adversarial nets. In *Advances in Neural Information Processing Systems (NeurIPS)*, pages 2672–2680, 2014.

[Huang *et al.*, 2018] Huaibo Huang, Ran He, Zhenan Sun, Tieniu Tan, et al. Introvae: Introspective variational autoencoders for photographic image synthesis. In *Advances in Neural Information Processing Systems (NeurIPS)*, pages 52–63, 2018.

[Kawachi *et al.*, 2018] Yuta Kawachi, Yuma Koizumi, and Noboru Harada. Complementary set variational autoencoder for supervised anomaly detection. In *2018 IEEE International Conference on Acoustics, Speech and Signal Processing (ICASSP)*, pages 2366–2370. IEEE, 2018.

[Kingma and Welling, 2013] Diederik P Kingma and Max Welling. Auto-encoding variational bayes. *arXiv preprint arXiv:1312.6114*, 2013.

[Makhzani *et al.*, 2016] Alireza Makhzani, Jonathon Shlens, Navdeep Jaitly, and Ian Goodfellow. Adversarial autoencoders. In *International Conference on Learning Representations (ICLR)*, 2016.

[Osada *et al.*, 2017] Genki Osada, Kazumasa Omote, and Takashi Nishide. Network intrusion detection based on semi-supervised variational auto-encoder. In *European Symposium on Research in Computer Security*, pages 344–361. Springer, 2017.

[Pidhorskyi *et al.*, 2018] Stanislav Pidhorskyi, Ranya Almohsen, and Gianfranco Doretto. Generative probabilistic novelty detection with adversarial autoencoders. In *Advances in Neural Information Processing Systems (NeurIPS)*, pages 6823–6834, 2018.

[Pimentel *et al.*, 2014] Marco AF Pimentel, David A Clifton, Lei Clifton, and Lionel Tarassenko. A review of novelty detection. *Signal Processing*, 99:215–249, 2014.

[Ravanbakhsh *et al.*, 2017] Mahdyar Ravanbakhsh, Moin Nabi, Enver Sangineto, Lucio Marcenaro, Carlo Regazzoni, and Nicu Sebe. Abnormal event detection in videos using generative adversarial nets. In *2017 IEEE International Conference on Image Processing (ICIP)*, pages 1577–1581. IEEE, 2017.

[Schlegl *et al.*, 2017] Thomas Schlegl, Philipp Seeböck, Sebastian M Waldstein, Ursula Schmidt-Erfurth, and Georg Langs. Unsupervised anomaly detection with generative adversarial networks to guide marker discovery. In *International Conference on Information Processing in Medical Imaging*, pages 146–157. Springer, 2017.

[Schölkopf *et al.*, 2000] Bernhard Schölkopf, Robert C Williamson, Alex J Smola, John Shawe-Taylor, and John C Platt. Support vector method for novelty detection. In *Advances in Neural Information Processing Systems (NeurIPS)*, pages 582–588, 2000.

[Škvára *et al.*, 2018] Vít Škvára, Tomáš Pevnỳ, and Václav Šmídl. Are generative deep models for novelty detection truly better? *arXiv preprint arXiv:1807.05027*, 2018.

[Sölch *et al.*, 2016] Maximilian Sölch, Justin Bayer, Marvin Ludersdorfer, and Patrick van der Smagt. Variational inference for on-line anomaly detection in high-dimensional time series. *arXiv preprint arXiv:1602.07109*, 2016.

[Suh *et al.*, 2016] Suwon Suh, Daniel H Chae, Hyon-Goo Kang, and Seungjin Choi. Echo-state conditional variational autoencoder for anomaly detection. In *2016 International Joint Conference on Neural Networks (IJCNN)*, pages 1015–1022. IEEE, 2016.

[Xu *et al.*, 2018] Haowen Xu, Wenxiao Chen, Nengwen Zhao, Zeyan Li, Jiahao Bu, Zhihan Li, Ying Liu, Youjian Zhao, Dan Pei, Yang Feng, et al. Unsupervised anomaly detection via variational auto-encoder for seasonal kpis in web applications. In *the 2018 World Wide Web Conference (WWW)*, pages 187–196, 2018.

[Zhao *et al.*, 2017] Shengjia Zhao, Jiaming Song, and Stefano Ermon. Infovae: Information maximizing variational autoencoders. *arXiv preprint arXiv:1706.02262*, 2017.

[Zheng *et al.*, 2018] Panpan Zheng, Shuhan Yuan, Xintao Wu, Jun Li, and Aidong Lu. One-class adversarial nets for fraud detection. *arXiv preprint arXiv:1803.01798*, 2018.